A1003 DF19 CONNECTOR

1.00mm Pitch/Disconnectable Crimp style connectors

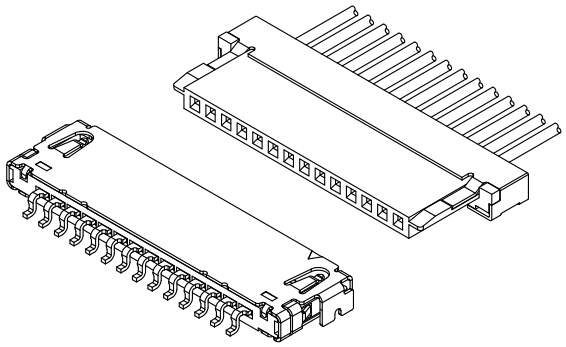

- The worlds first LVDS crimp style connector. It is used to connect the display screen to the
- main board. Height of 1.65 mm
- Compact, low profile design.

E529482

Specifications:

- Current rating: 1.0 A AC,DC (AWG #28)
- Voltage rating: 100 V AC/DC
- Temperature range: -40℃～+105℃
  (including temperature rise in applying electrical current)
- Contact resistance: Initial value/ 30mΩ max
  After environmental testing/ 30mΩ max
- Insulation resistance: 500 MΩ min
- Withstanding voltage: 500 VAC/minute
- Applicable wire: Conductor size/ AWG#32 to #28
  Insulation O.D./ 0.4 to 0.6 mm

* Compliant with RoHS2/ REACH
* In using the products, refer to "Handling Precautions for Terminals and Connectors "described on our website (Technical documents of Product information page).
* Contact CSG for details

Material:

Housing: PA66,UL94-V0;Color:Beige
Terminal: Phosphor/ Gold-Plated
Wafer Housing: PA6T,UL94-V0;Color:Beige
Wafer Pin: Phosphor/ Gold-Plated 3U"
Shell: Brass/ Tin-plated

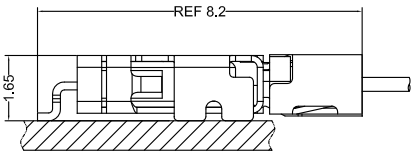

Note: 1. The above figure is the figure viewed from the connector mounting side.
2. Tolerances are non-cumulative: ±0.08 mm for all centers.
3.The dimensions above should serve as a guideline.Contact CSG for details.

CSG

Tel:+86-769-85312070 85375507 E-mail:James@csg-china.com www.csg-china.com

A1003 DF19

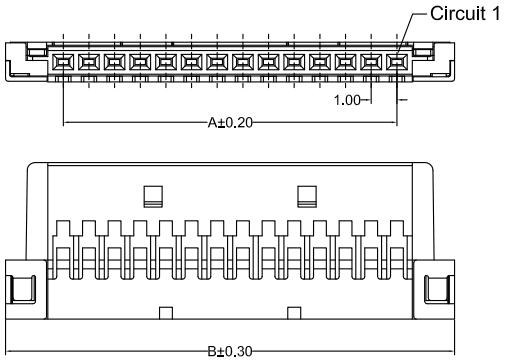

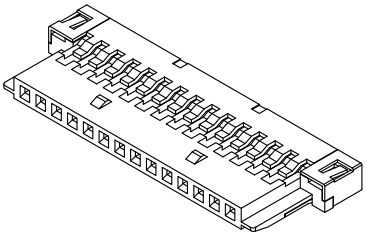

A1003HF 0XX AA P6 C 001

- PIN: 002=2PINS
- SPECIAL: AA=NO Special
- Material: P6=PA66 94V-0
- Code: 001
- Color: C=Beige

CSG PART NO.	Dimension mm		Q'ty/BAG
	A	B	
A1003HF014AAP6C001	13.00	17.50	1000PCS
A1003HF020AAP6C001	19.00	23.50	1000PCS
A1003HF030AAP6C001	29.00	33.50	1000PCS

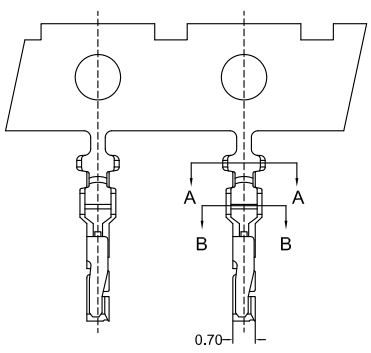

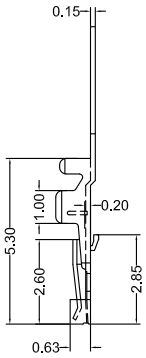



SECTION A-A



SECTION B-B

A1003 M 0 A GF 001

- Type: M=Female Terminal
- Material: A=Phosphor
- Finish: GF=Gold-Plated
- Code: 001

CSG PART NO.	Wire Range	Insulation O.D.	Q'ty/Reel
A1003M0AGF001	AWG#28~#32	0.80mm(max)	30000PCS

CSG

Tel:+86-769-85312070 85375507 E-mail:James@csg-china.com www.csg-china.com

A1003 DF19

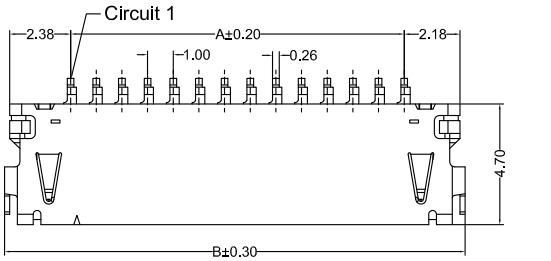

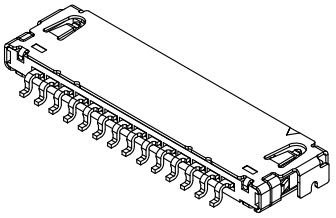

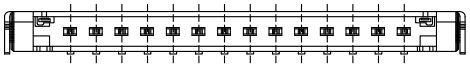

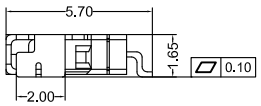

A1003RS 0XX AA 6T G1 B C 001

- PIN: 002=2PINS
- SPECIAL: AA=NO Special
- Material: 6T=PA6T 94V-0
- Finish: G1=Gold-Plated 3U"
- Packing: B=Tape & Reel
- Color: C=Beige
- Code: 001

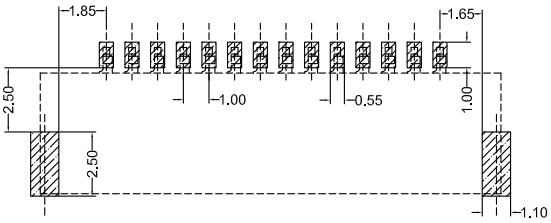

Recommended P.C.B Layout
General Tolerance±0.05

CSG PART NO.	Dimension mm		Q'ty/Reel
	A	B	
A1003RS014AA6TG1BC001	13.00	17.95	2500PCS
A1003RS020AA6TG1BC001	19.00	23.95	2500PCS
A1003RS030AA6TG1BC001	29.00	33.95	2000PCS

CSG

Tel:+86-769-85312070 85375507 E-mail:James@csg-china.com www.csg-china.com