A1200 78172 CONNECTOR

1.20mm Pitch/Disconnectable Crimp style connectors

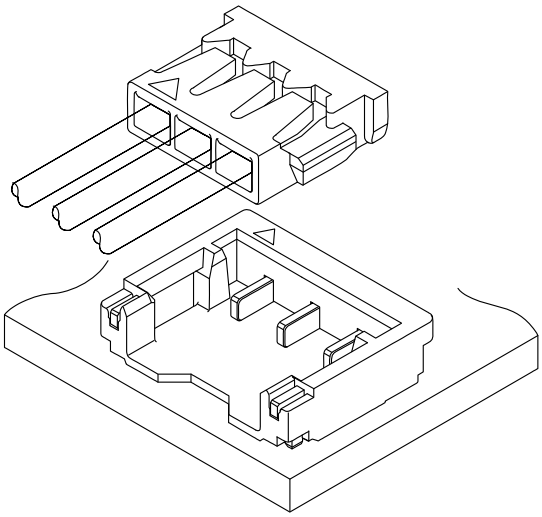

E529482

Specifications:

- Current rating: 2.0 A / AC,DC
- Voltage rating: 50 V AC/DC
- Temperature range: -40℃～+105℃
  (including temperature rise in applying electrical current)
- Contact resistance: Initial value/ 20mΩ max
- Insulation resistance: 100 MΩ min
- Withstanding voltage: 500 VAC/minute
- Applicable wire: Conductor size/ AWG#36~#30
  Insulation O.D./ 0.30 to 0.75 mm

* Compliant with RoHS2/ REACH
* Refer to "General Instruction and Notice when using Terminals and Connectors"
* Contact CSG for details

Material:

Housing: LCP/UL94-V0;Color:Black
Terminal: Phosphor/ Gold-Plated
Wafer Housing: PA4T,UL94-V0;Color:Black
Wafer Pin: Phosphor/ Gold-Plated
Wafer Fixed Foot: Brass/ Tin-plated

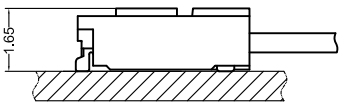

Note: 1. The above figure is the figure viewed from the connector mounting side.
2. Tolerances are non-cumulative: ±0.08 mm for all centers.
3.The dimensions above should serve as a guideline.Contact CSG for details.

CSG

Tel:+86-769-85312070 85375507 E-mail:James@csg-china.com www.csg-china.com

A1200 78172

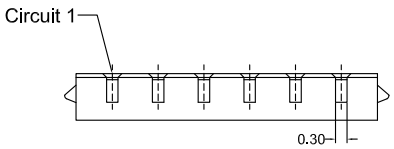

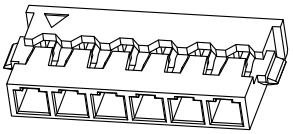

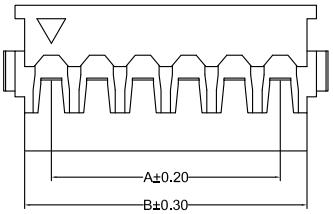

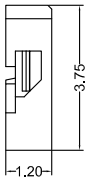

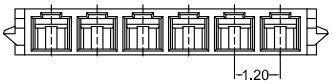

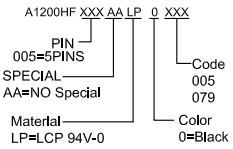

CSG PART NO.	Dimension mm		Q'ty/BAG
	A	B	
A1200HF002AALP0XXX	1.20	2.60	1000PCS
A1200HF003AALP0XXX	2.40	3.80	1000PCS
A1200HF004AALP0XXX	3.60	5.00	1000PCS
A1200HF005AALP0XXX	4.80	6.20	1000PCS
A1200HF006AALP0XXX	6.00	7.40	1000PCS
A1200HF007AALP0XXX	7.20	8.60	1000PCS
A1200HF008AALP0XXX	8.40	9.80	1000PCS
A1200HF009AALP0XXX	9.60	11.00	1000PCS
A1200HF010AALP0XXX	10.80	12.20	1000PCS
A1200HF011AALP0XXX	12.00	14.40	1000PCS
A1200HF012AALP0XXX	13.20	16.60	1000PCS
A1200HF013AALP0XXX	14.40	17.80	1000PCS
A1200HF014AALP0XXX	15.60	19.00	1000PCS
A1200HF015AALP0XXX	16.80	20.20	1000PCS

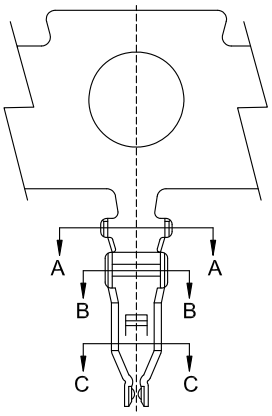

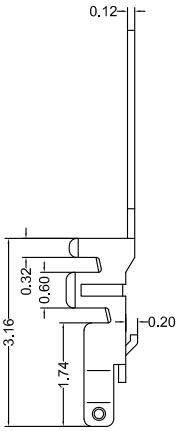



SECTION A-A



SECTION B-B

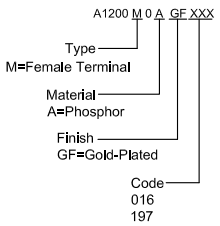



SECTION C-C

CSG PART NO.	Wire Range	Insulation O.D.	Q'ty/Reel
A1200M0AGFXXX	AWG#30~#36	0.75mm(max)	15000PCS

CSG

Tel:+86-769-85312070 85375507 E-mail:James@csg-china.com www.csg-china.com

A1200 78172

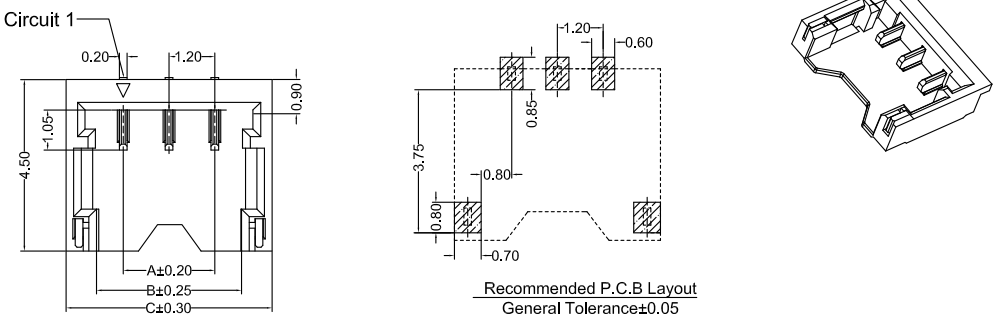

CSG PART NO.	Dimension mm			Q'ty/Reel
	A	B	C	
A1200VS002AA4TGFB0109	1.20	2.60	4.20	4000PCS
A1200VS003AA4TGFB0109	2.40	3.80	5.40	4000PCS

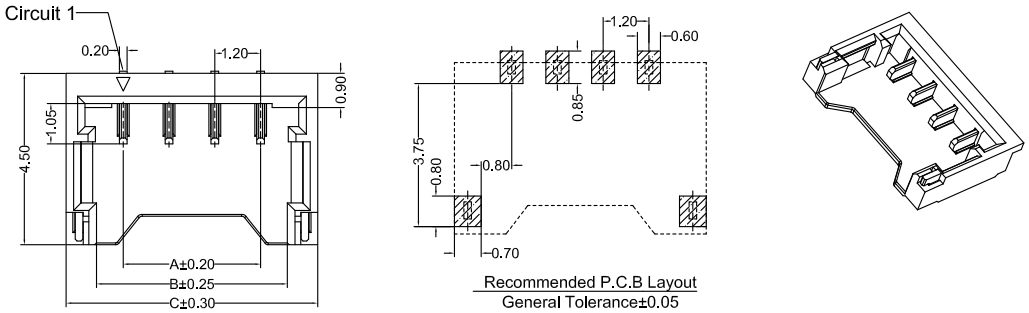

CSG PART NO.	Dimension mm			Q'ty/Reel
	A	B	C	
A1200VS004AA4TGFB0109	3.60	5.00	6.60	4000PCS
A1200VS005AA4TGFB0109	4.80	6.20	7.80	4000PCS
A1200VS006AA4TGFB0109	6.00	7.40	9.00	4000PCS

CSG

Tel:+86-769-85312070 85375507 E-mail:James@csg-china.com www.csg-china.com