E529482

CUSTOMER DRAWING

REVISIONS				
SYM	ECN No.	DESCRIPTION	DATE	APPROVED
A		MASS-PRODUCTION	03/13/2020	James

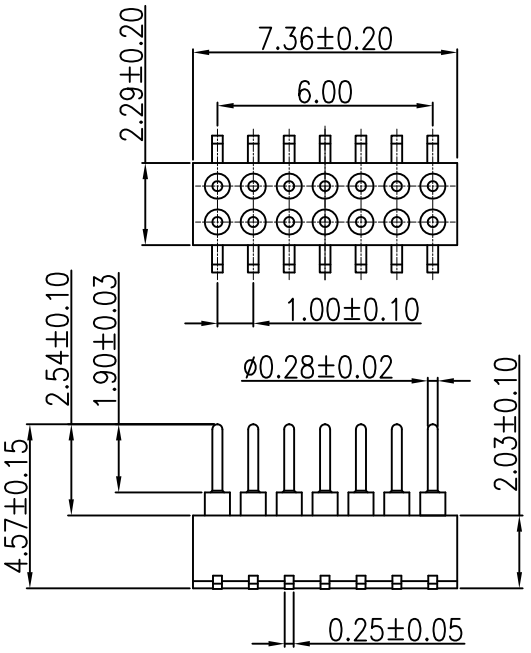

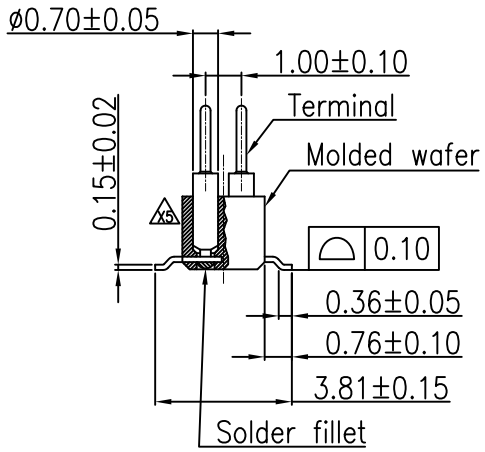

△The planting ball should be full

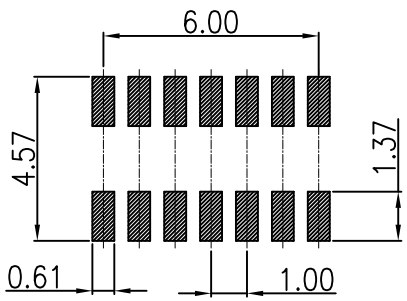

PCB LAYOUT
TOLERANCE ±0.05

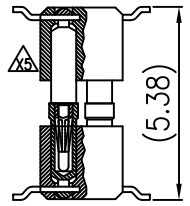

Matting Height

NOTES:

MATERIAL:

1. HOUSING: LCP,UL 94V-0. COLOR:BLACK
2. PIN(CONTACT): COPPER ALLOY.

PLATED:

1. CONTACT AREA : PLATING GOLD 0.38 MICROMETERS MIN OVER 1.27~2.54 MICROMETERS NICKEL.
2. SOLDER NAIL: PLATING MATTE TIN 2.54~5.08 MICROMETERS OVER 1.27~2.54 MICROMETERS NICKEL.

ELECTRICAL

1. CURRENT RATING:1A.
2. VOLTAGE RATING:250V DC/AC.
3. CONTACT RESISTANCE:20 mΩ MAX.
4. INSULATION RESISTANCE:5000MΩ MIN.
5. DIELECTRIC VOLTAGE:500V AC/1MINUTE.
6. TEMPERATURE RISE:30°C MAX

ENVIRONMENTAL:

1. OPERATION TEMPERATURE:-40°C~+105°C.
2. REFLOW SOLDERING:260°C±5°C,30S.
3. ENVIRONMENTAL REQUIREMENT:ACCORDING TO RoHS STANDARD.

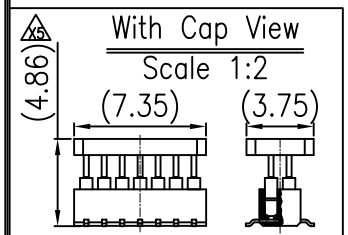

With Cap View
Scale 1:2

TOLERANCE UNIT(mm)		APPROVALS	DATE
X.	±0.30	DRAWN Nio	03/13/2020
X.X	±0.25	CHECKED James	03/13/2020
X.XX	±0.15	APPROVED James	03/13/2020
X.XXX	±0.10		
ANGULAR	±2°		
UNLESS OTHERWISE SPECIFIED		UNIT MM	

CSG Industrial Co,.Ltd
http://www.csg-china.com

TITLE: 1.0 PITCH SMT Vertical Angle Wafer 14PIN H2.03

SCALE N.A.	PART NO.	DRAWING NO.	REV.
SHEET 1 OF 1	B1000VS207AALPG2B0001	B1000VS207AALPG2B0001 A	A
CUSTOMER CODE	CUSTOMER PART NO.		

E529482

CUSTOMER DRAWING

REVISIONS				
SYM	ECN No.	DESCRIPTION	DATE	APPROVED
A		MASS-PRODUCTION	03/13/2020	James

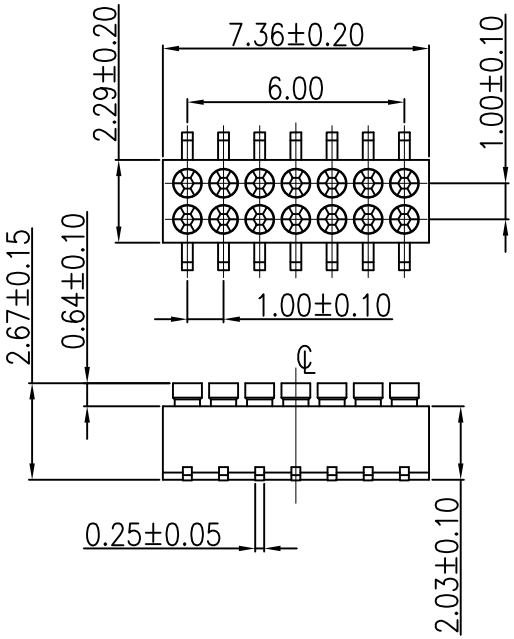

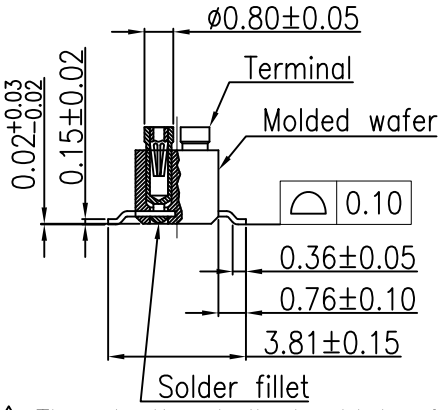

△ The planting ball should be full

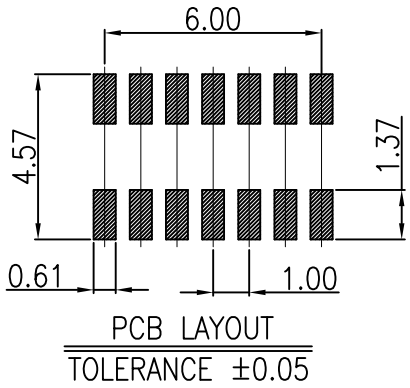

PCB LAYOUT

TOLERANCE ±0.05

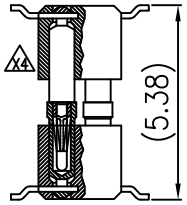

Matting Height

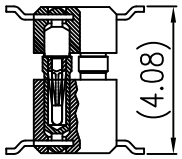

Matting Height

NOTES:

MATERIAL:

1. HOUSING: LCP,UL 94V-0. COLOR:BLACK
2. PIN(CONTACT): COPPER ALLOY.

PLATED:

1. CONTACT: PLATING GOLD 0.0254 MICROMETERS MIN OVER 1.27~2.54MICROMETERS NICKEL. (EXCEPT CONTACT AREA).
2. CONTACT AREA : PLATING GOLD 0.38 MICROMETERS MIN OVER 1.27~2.54MICROMETERS NICKEL.
3. SOLDER NAIL: PLATING MATTE TIN 2.54~5.08 MICROMETERS OVER 1.27~2.54MICROMETERS NICKEL.

ELECTRICAL

1. CURRENT RATING:1A.
2. VOLTAGE RATING:250V DC/AC.
3. CONTACT RESISTANCE:20 mΩ MAX.
4. INSULATION RESISTANCE:5000MΩ MIN.
5. DIELECTRIC VOLTAGE:500V AC/1MINUTE.
6. TEMPERATURE RISE:30°C MAX

ENVIRONMENTAL:

1. OPERATION TEMPERATURE:-40°C~+105°C.
2. REFLOW SOLDERING:260°C±5°C,30S.
3. ENVIRONMENTAL REQUIREMENT:ACCORDING TO RoHS STANDARD.

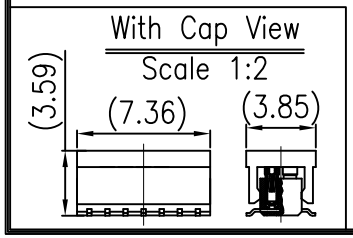

ISSUED BY CSG IN CHINA PDF format D.C 2014-11-28

CSG Industrial Co.,Ltd RoHS Compliant

TOLERANCE UNIT(mm)		APPROVALS	DATE
X.	±0.30	DRAWN Nio	03/13/2020
X.X	±0.25	CHECKED James	03/13/2020
X.XX	±0.15	APPROVED James	03/13/2020
X.XXX	±0.10		
ANGULAR	±2°		
UNLESS OTHERWISE SPECIFIED		UNIT MM	

CSG Industrial Co,.Ltd

http://www.csg-china.com

TITLE: 1.0 PITCH SMT Vertical Angle Wafer 14PIN H2.03

SCALE N.A.	PART NO.	DRAWING NO.	REV.
SHEET 1 OF 1	B1000VS207AALPG2B0002	B1000VS207AALPG2B0002 A	A
CUSTOMER CODE	CUSTOMER PART NO.	DHS214-844-GG-M	

E529482

CUSTOMER DRAWING

REVISIONS				
SYM	ECN No.	DESCRIPTION	DATE	APPROVED
A		MASS-PRODUCTION	05/13/2022	James

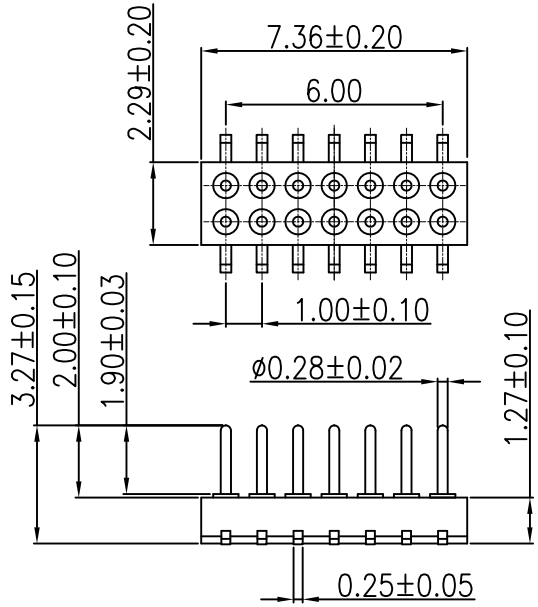

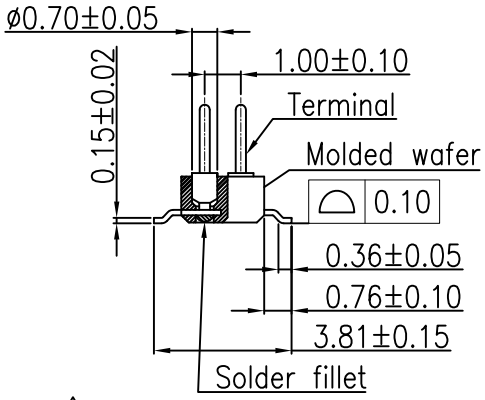

△The planting ball should be full

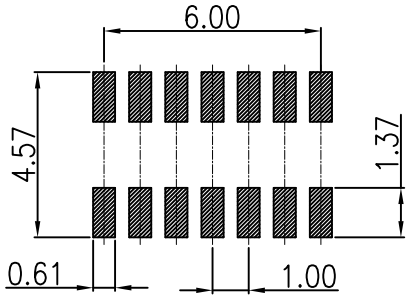

PCB LAYOUT

TOLERANCE ±0.05

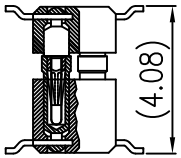

Matting Height

NOTES:

MATERIAL:

1. HOUSING: LCP,UL 94V-0. COLOR:BLACK
2. PIN(CONTACT): COPPER ALLOY.

PLATED:

1. CONTACT AREA : PLATING GOLD 0.38 MICROMETERS MIN OVER 1.27~2.54 MICROMETERS NICKEL.
2. SOLDER NAIL: PLATING MATTE TIN 2.54~5.08 MICROMETERS OVER 1.27~2.54 MICROMETERS NICKEL.

ELECTRICAL

1. CURRENT RATING:1A.
2. VOLTAGE RATING:250V DC/AC.
3. CONTACT RESISTANCE:20 mΩ MAX.
4. INSULATION RESISTANCE:5000MΩ MIN.
5. DIELECTRIC VOLTAGE:500V AC/1MINUTE.
6. TEMPERATURE RISE:30°C MAX

ENVIRONMENTAL:

1. OPERATION TEMPERATURE:-40°C~+105°C.
2. REFLOW SOLDERING:260°C±5°C,30S.
3. ENVIRONMENTAL REQUIREMENT:ACCORDING TO RoHS STANDARD.

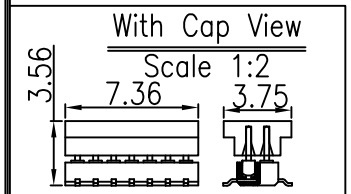

ISSUED BY CSG IN CHINA PDF format D.C. 2014-11-28

CSG Industrial Co.,Ltd RoHS Compliant

TOLERANCE UNIT(mm)		APPROVALS	DATE
X.	±0.30	DRAWN Nio	05/13/2022
X.X	±0.25	CHECKED James	05/13/2022
X.XX	±0.15	APPROVED James	05/13/2022
X.XXX	±0.10		
ANGULAR	±2°		
UNLESS OTHERWISE SPECIFIED		UNIT MM	

CSG Industrial Co,.Ltd

http://www.csg-china.com

TITLE: 1.0 PITCH SMT Vertical Angle Wafer 14PIN H1.27

SCALE N.A.	PART NO.	DRAWING NO.	REV.
SHEET 1 OF 1	B1000VS207AALPG2B0003	B1000VS207AALPG2B0003 A	A
CUSTOMER CODE	CUSTOMER PART NO.	DHAM-2-14-846-GH-M	